— NOTICE —
This drawing is a part of the proprietary article therein disclosed, and all design, manufacturing, reproduction, use, patent rights, and sales rights regarding the same are expressly reserved by Aero Space Controls Corporation, Wichita, Kansas. It is submitted under a confidential relationship for a specific purpose and shall not be disclosed to any unauthorized person or incorporated in any other projects.

REVISIONS				
C.O. NO.	REV.	REVISION DESCRIPTION	DATE	APPD.
ASC4201	U	SEE SHEET 1 FOR REVISIONS	10-11-06	S.A.

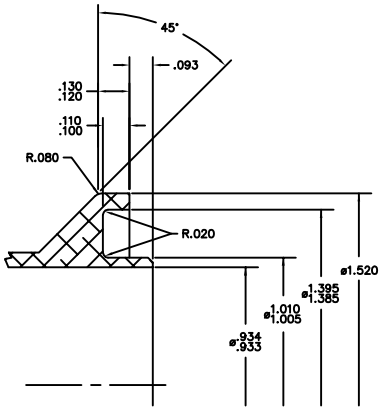

DETAIL 'A'
SCALE: 4:1
FOR -3,-5,-7,-9 AND -13 ONLY

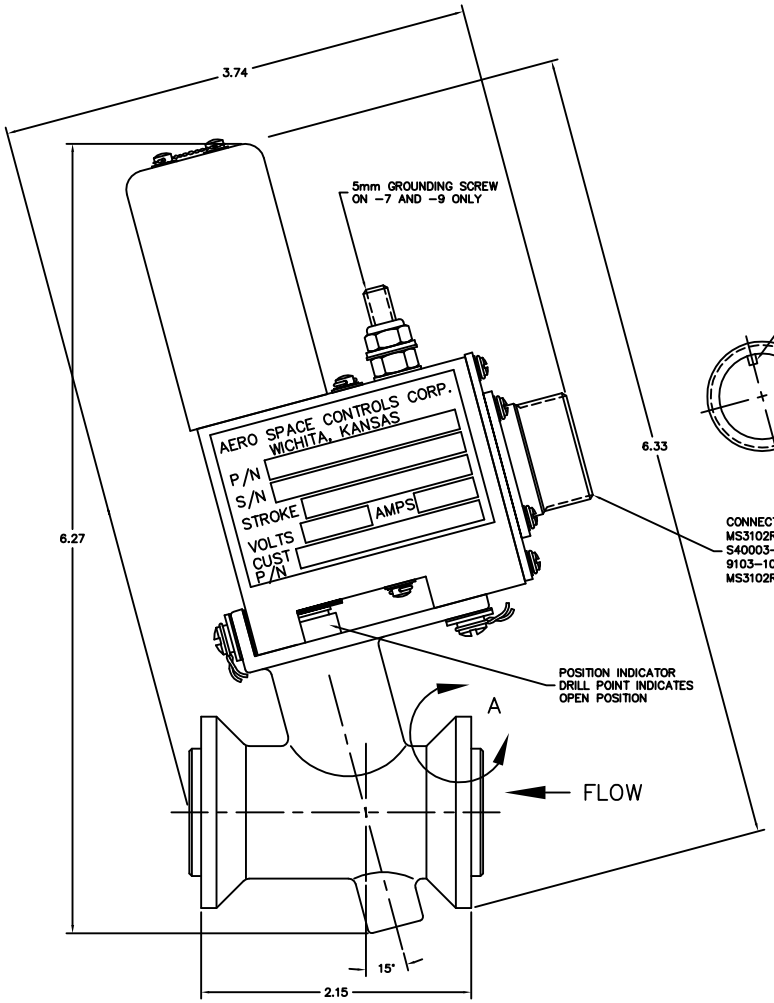

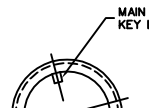

CONNECTOR:
MS3102R14S-5P (-3, -5 ONLY)
S40003-10B-6P (-7 ONLY)
9103-10-6P-SP (-9 ONLY)
MS3102R14S-2P (-13 ONLY)

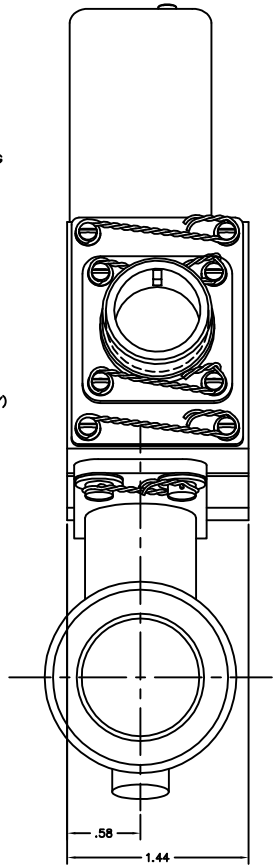

NOTES CONTINUED:

7. AMBIENT TEMPERATURE: -85°F TO 160°F

8. VALVE ASSEMBLY TO MEET OR EXCEED ALL ADDITIONAL REQUIREMENTS AS OUTLINED IN AERO COMMANDER DRAWING 3880219-503.

9. UNIT LIFE: A MINIMUM OF 20,000 CYCLES AT STANDARD CONDITIONS.

10. LIMIT SWITCH TO CLOSE CIRCUIT "AC" WHEN VALVE IS COMPLETELY OPEN AND LIMIT SWITCH TO CLOSE CIRCUIT "BD" WHEN VALVE IS COMPLETELY CLOSED.

11. MICROSWITCH RATING:
MOTOR.....2 AMP
INDUCTIVE.....2 AMP
RESISTIVE.....5 AMP
LAMP.....1 AMP

12. FOR ASSEMBLY OF ALL CONFIGURATIONS SEE DRAWING 1914101

QTY	ITEM	SIZE	PART NUMBER	DESCRIPTION	MATERIAL	MATL SPEC	FINISH	FINISH SPEC
			-3,-5,-7,-9,-13					

LIST OF MATERIALS

DIMENSIONAL SYMBOLS PER MIL-STD-8B
FLATNESS & STRAIGHTNESS
ANGULARITY
PERPENDICULARITY
PARALLELISM
CONCENTRICITY
TRUE POSITION
ROUNDNESS
SYMETRY
Ⓜ OMIT MAXIMUM MATERIAL CONDITION
Ⓢ OMIT REGARDLESS OF FEATURE SIZE

UNLESS OTHERWISE SPECIFIED
1. DIMENSIONS ARE IN INCHES
TOLERANCES ON
FRACTIONS ± 1/16
XX DEC. ±.030
XXX DEC. ±.010
ANGLES ±2° OF DRILL HOLES AND 10387
2. SURFACE ROUGHNESS PER MIL-STD-10
3. REMOVE BURRS & BREAK SHARP EDGES .005 MAX
4. INTERNAL RADII .005 TO .015
THREADS
5. STRAIGHT SCREW MIL-S-7742
TAPERED PIPE MIL-P-7105
DO NOT SCALE DRAWING
6. ALL DIMENSIONS BEFORE PLATING

SIGNATURES		DATE
DR	B. CLARK	10-30-79
CHK		
ENGR		
APPR		
REV ENGR		

AERO SPACE CONTROLS CORPORATION
WICHITA, KANSAS

TITLE
BLEED AIR
SHUTOFF VALVE

CODE IDENT NO.	SIZE	DWG NO.
	D	1914T100
SCALE 2:1	UNIT WT	LBS
SHT 2 OF 4		