– NOTICE –
This drawing is a part of the proprietary article therein disclosed, and all design, manufacturing, reproduction, use, patent rights, and sales rights regarding the same are expressly reserved by Aero Space Controls Corporation, Wichita, Kansas. It is submitted under a confidential relationship for a specific purpose and shall not be disclosed to any unauthorized person or incorporated in any other projects.

| REVISIONS | | | | |
|---|---|---|---|---|
| C.O. NO. | REV. | REVISION DESCRIPTION | DATE | APPD. |
| ASC4920 | T | SEE SHEET 1 FOR REVISIONS | 3–18–11 | D.S. |

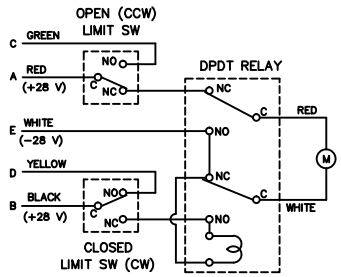


ELECTRIC SCHEMATIC 1915T100–15

SHOWN IN CLOSED POSITION

– FOR DRAFTING PURPOSES THIS SCHEMATIC HAS BEEN GROUPED –

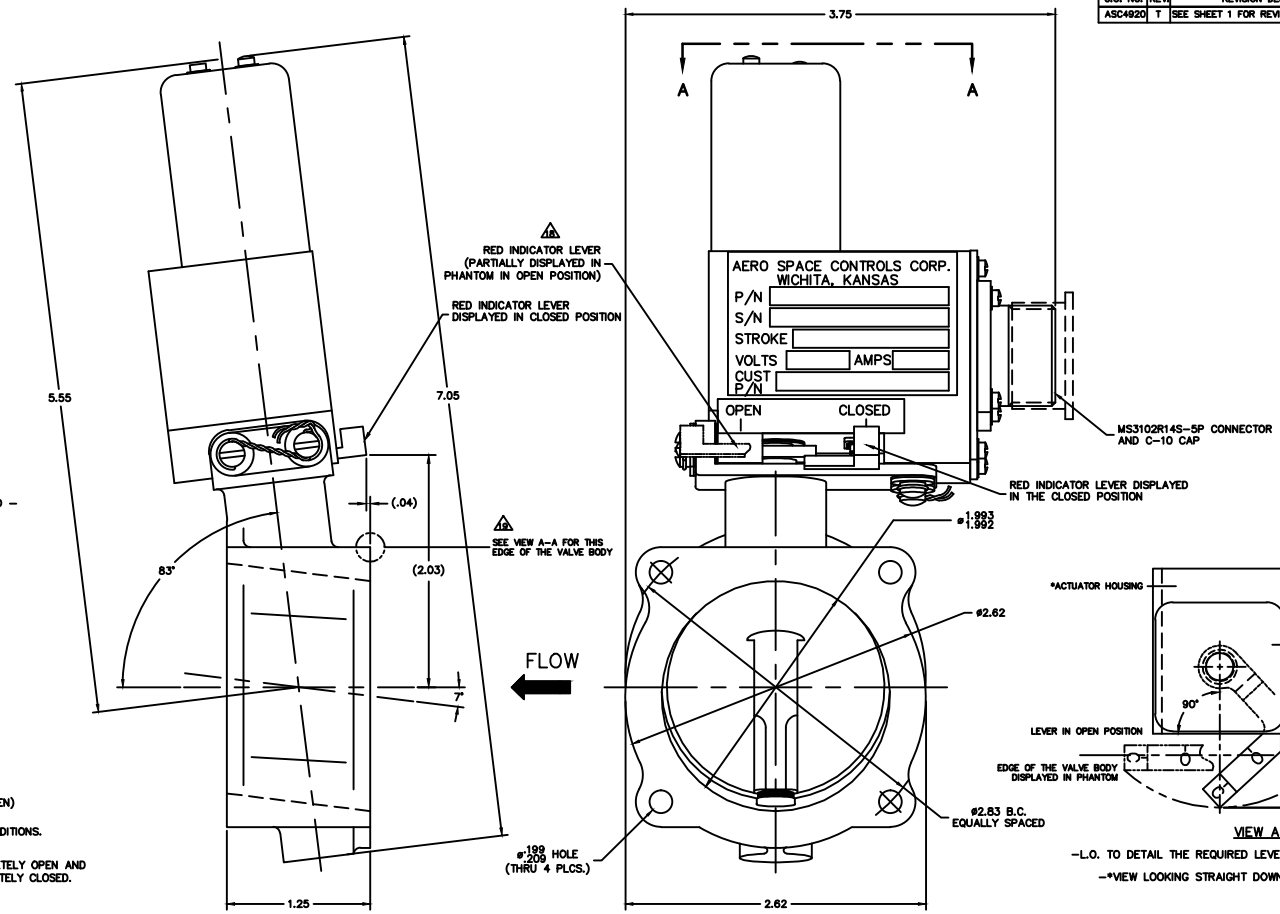


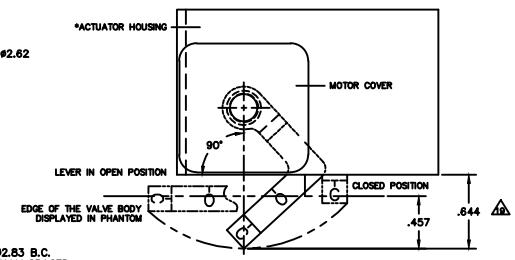


VIEW A–A

–L.O. TO DETAIL THE REQUIRED LEVER CLEARANCE DURING ROTATION–

–*VIEW LOOKING STRAIGHT DOWN ON ACTUATOR HOUSING–

NOTES CONTINUED:

7. AMBIENT TEMPERATURE: –40°F TO 160°F

8. VALVE DATA:
   MAXIMUM OPERATING PRESSURE: 130 PSIG AT 550°F
   MAXIMUM LEAKAGE: 0.10 LB./MIN. AT 20 PSIG (INTERNAL)
   0.05 LB./MIN. AT 20 PSIG (EXTERNAL)

9. ACTUATOR DATA:
   VOLTAGE: 28 VDC
   STALL CURRENT: 1.0 AMP MAX.
   RUNNING CURRENT: .4 AMPS
   DUTY CYCLE: CONTINUOUS
   CYCLE TIME: 0.5 TO 2.0 SECONDS (OPEN TO CLOSE TO OPEN)

10. UNIT LIFE: A MINIMUM OF 20,000 CYCLES AT STANDARD CONDITIONS.

11. LIMIT SWITCH TO CLOSE CIRCUIT 'AC' WHEN VALVE IS COMPLETELY OPEN AND LIMIT SWITCH TO CLOSE CIRCUIT 'BD' WHEN VALVE IS COMPLETELY CLOSED.

12. MICROSWITCH RATING AT 28 VDC, SEA LEVEL:
   – INDUCTIVE: 3 AMP
   – RESISTIVE: 5 AMP

13. SEE SHEET (1)

14. SEE SHEET (1)

15. THIS SHEET (4) DETAILS THE VALVE BODY OF THIS (–9) ASSEMBLY BEING MADE FROM 356–T6 ALUMINUM.

16. SEE SHEETS (5) AND (6) AS APPLICABLE AND SHEETS (7) AND (8) AS APPLICABLE

17. SEE SHEETS (5) AND (6) AS APPLICABLE AND SHEETS (7) AND (8) AS APPLICABLE

18. INDICATOR LEVER CAN BE USED TO MANUALLY POSITION THE BUTTERFLY DISK

19. IN VIEW A–A: NOTE THE DIMENSIONS SHOWN ARE REFLECTIVE OF THE LAYOUT BEING VIEWED STRAIGHT DOWN ON THE ACTUATOR HOUSING.
   DIMENSION .644 TAKEN FROM THE EDGE/VERTICAL SURFACE OF THE ACTUATOR HOUSING TO THE OUTER EDGE OF THE INDICATOR LEVER.
   DIMENSION .457 TAKEN FROM THE TOP EDGE ONLY OF THE VALVE BODY TO THE OUTER EDGE OF THE INDICATOR LEVER.
   THE AREA AS DEPICTED WILL NEED TO BE CLEAR OF ANY INTERFERENCE SO AS TO PROVIDE PROPER FUNCTIONAL ROTATION OF THE RED INDICATOR LEVER.

–15 BLEED AIR VALVE w/INDICATOR LEVER

| QTY. | ITEM | SIZE | PART NUMBER | DESCRIPTION | MATERIAL | MAT'L. SPEC. | FINISH | FINISH SPEC. |
|---|---|---|---|---|---|---|---|---|
| | | | –15 | BLEED AIR VALVE | | | | |

LIST OF MATERIALS

DIMENSIONAL SYMBOLS PER ASME Y14.5
FLATNESS
STRAIGHTNESS
ANGULARITY
PERPENDICULARITY
PARALLELISM
CONCENTRICITY
TRUE POSITION
CIRCULARITY (ROUNDNESS)
SYMMETRY
(M) (MMC) MAXIMUM MATERIAL CONDITION
(RFS) REGARDLESS OF FEATURE SIZE

UNLESS OTHERWISE SPECIFIED
1. DIMENSIONS ARE IN INCHES
– TOLERANCES ON –
FRACTIONS ± 1/16 ANGLES ±2° DRILL HOLES AND 10387
XX DEC ±.030
XXX DEC ±.010
2. SURFACE ROUGHNESS PER ASME–B46.1
3. REMOVE BURRS & BREAK SHARP EDGES .010 MAX.
4. INTERNAL RADII .005 TO .015
THREADS
5. STRAIGHT SCREW MIL–S–7742
TAPERED PIPE MIL–P–7105
6. ALL DIMENSIONS BEFORE PLATING
DO NOT SCALE DRAWING

| SIGNATURES | | DATE |
|---|---|---|
| DR. | D. ORTH | 3–13–09 |
| CHK. | | |
| ENGR. | | |
| APPD. | DON SIMON | 3–26–09 |
| NEXT ASSY. | | |

AERO SPACE CONTROLS CORPORATION
WICHITA, KANSAS

TITLE: BLEED AIR VALVE
–MANUAL INDICATOR LEVER–

CODE IDENT No. | SIZE D | DWG. No. 1915T100
SCALE: 2:1 | UNIT WT. LBS. | SHT. 9 OF 9