— NOTICE —
This drawing is a part of the proprietary article therein disclosed, and all design, manufacturing, reproduction, use, patent rights, and sales rights regarding the same are expressly reserved by Aero Space Controls Corporation, Wichita, Kansas. It is submitted under a confidential relationship for a specific purpose and shall not be disclosed to any unauthorized person or incorporated in any other projects.

REVISIONS

C.O. NO.	REV.	REVISION DESCRIPTION	DATE	APPD.
ASC4258	L	SEE SHEET 1 FOR REVISIONS	1-15-07	S.A.

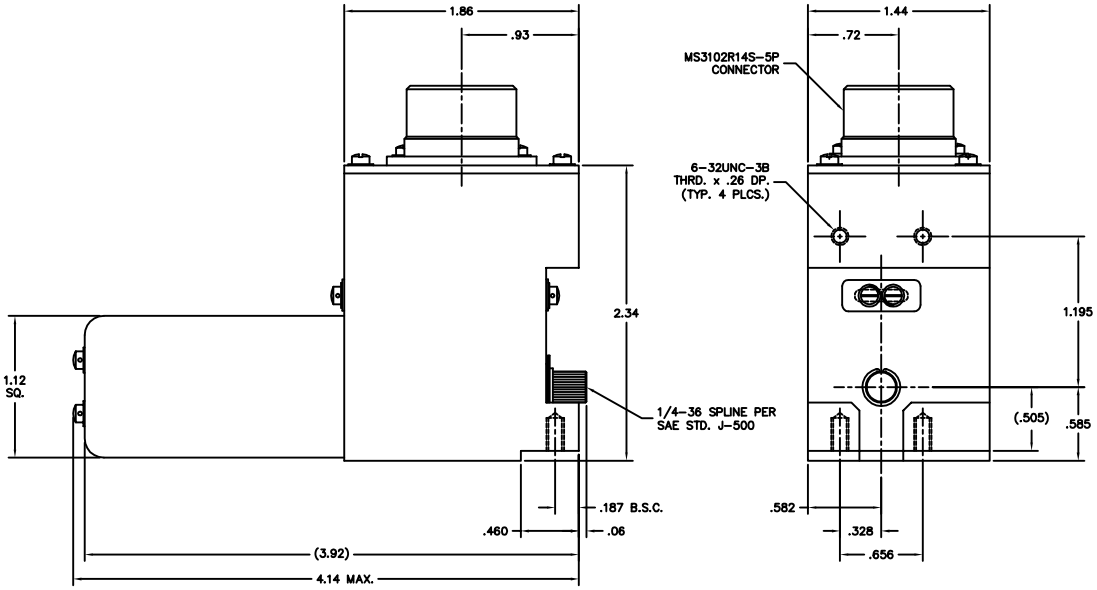

-31 CONFIGURATION

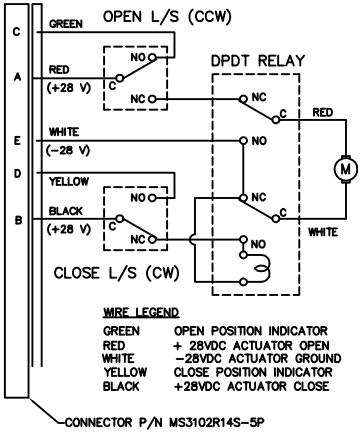

-31 ELECTRICAL SCHEMATIC

NOTES CONTINUED:

7. VOLTAGE: 18-30 VOLTS DC, 28 VOLTS NOMINAL
8. STALL CURRENT: 2.0 AMPS MAX.
9. RUNNING CURRENT: .4 AMPS MAX.
10. DUTY CYCLE: CONTINUOUS OR INTERMITTENT
11. TIMING PER CYCLE (90°): 4-6 SECONDS
12. FOR ASSEMBLY SEE DRAWING 1619101-31 SHEET (6)

DASH NO.	NEXT ASSY.	USED ON
-31		
		APPLICATION

-31 ACTUATOR, ROTARY

QTY	ITEM	SIZE	PART NUMBER	DESCRIPTION	MATERIAL	MATL SPEC	FINISH	FINISH SPEC

LIST OF MATERIALS

DIMENSIONAL SYMBOLS PER ASME Y14.5
FLATNESS
STRAIGHTNESS
ANGULARITY
PERPENDICULARITY
PARALLELISM
CONCENTRICITY
TRUE POSITION
CIRCULARITY (ROUNDNESS)
SYMMETRY
(M) (RFS) MAXIMUM MATERIAL CONDITION
(L) (RFS) REGARDLESS OF FEATURE SIZE

UNLESS OTHERWISE SPECIFIED
1. DIMENSIONS ARE IN INCHES
TOLERANCES ON
FRACTIONS ± 1/16
XX DEC ±.030
XXX DEC ±.010
ANGLES ±2° OF DRILL HOLES AND 10387
2. SURFACE ROUGHNESS PER MIL-STD-10
3. REMOVE BURRS & BREAK SHARP EDGES .005 MAX
4. INTERNAL RADII .005 TO .015
THREADS
5. STRAIGHT SCREW MIL-S-7742
TAPERED PIPE MIL-P-7105
DO NOT SCALE DRAWING

SIGNATURES		DATE
DR	D. ORTH	1-15-07
CHK		
ENGR		
APPR	S AXTELL	1-15-07
NEXT ASSY		

6. ALL DIMENSIONS BEFORE PLATING

AERO SPACE CONTROLS CORPORATION
WICHITA, KANSAS

TITLE
ACTUATOR, ROTARY

CODE IDENT NO.	SIZE	DWG NO.
	D	1619T100

SCALE 2:1 UNIT WT LBS SHT 5 OF 5